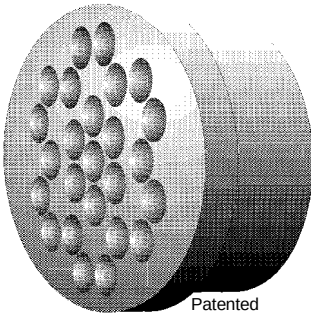

NO, NO_2, NOx and SO_2 Sampling Protocol Using The Ogawa Sampler*

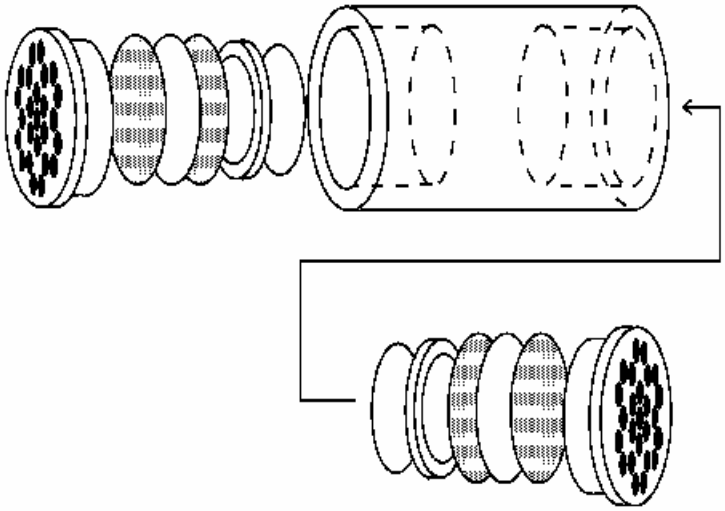

V6.06

Notice

Certain products mentioned in this User's Guide may be trademarks. These products have been mentioned for identification purposes only.

Version Number

Edition	Month / Year
6.0	June / 2006

* Acknowledgement

System developed by Yokohama City Research Institute of Environmental Science, Yokohama, Japan, Report No. 128, March 1997

Table of Contents

GENERAL INFORMATION 4

OGAWA SAMPLER ASSEMBLY 5

TRANSPORT AND STORAGE 6

APPLICATION OF THE SAMPLER IN AN OUTDOOR MICROENVIRONMENT 7

ANALYTICAL METHOD FOR NO, NO2 AND NOX 8

CALCULATION OF CONCENTRATION FOR NOX, NO_2 AND NO 11

CALCULATION OF CONCENTRATION CONVERSION COEFFICIENTS FOR NO AND NO_2 . 16

ANALYTICAL METHOD FOR SO_2 22

CALCULATION OF CONCENTRATION FOR SO2 23

COMPARISON OF INTEGRATED SAMPLING AND REAL-TIME MONITORS 26

BLANK TEST VALUES 27

EXAMPLE CALCULATIONS 28

General Information

1. "*Water*", in all cases, shall mean water meeting ASTM Type I specifications. (Equal to Milli-Q by Millipore). Use Reagent grade chemicals for all applications.

2. "*Wash*", in all cases, shall mean cleaning thoroughly with water meeting ASTM Type I specifications.

3. All sampler components should be carefully rinsed and dried before each use. This is an important function, and special care should be taken to do this step carefully.

4. Washing, drying, assembly of sampler, and loading with the proper pre-coated filters should be done in a clean area, free of NOx contamination. It is not necessary to use a glove box.

5. Ideal exposure time is at least 24 hours for monitoring NO, NO2 and NOx. For SO_2 monitoring, the exposure time should be at least several days. This amount of time will develop results from a few PPB to large quantities of PPB's. Shorter exposure times are practical where the expected concentration is known to be high. It is possible to use an exposure time as long as 30 days for low concentrations of NO_2 and SO_2.

6. When the point of research is outdoors, the sampler should be given protection from the sun and rainfall. Ogawa & Co., USA, Inc. has an opaque shelter and mounting bracket designed for this purpose.

7. Direct exposure of individuals can be easily measured by using the alligator clip to attach the sampler to clothing as close to the face as possible.

8. Concentration conversion coefficients for NO is 60, NO2 is 56 and SO_2 is 39, assuming temperature of 20 ºC, and relative humidity of 70%. Other concentration conversion coefficients, based on different temperatures and humidity, can be obtained from Tables 4 and 6.

9. Satisfactory results have been obtained with concentrations as low as 2 PPB.

Ogawa Sampler Assembly

The sampler is comprised of 2 chambers. In each chamber of the sampler, the assembly stack-up is described below. Start at the innermost position with the pad and progress outwards to the diffuser end cap.

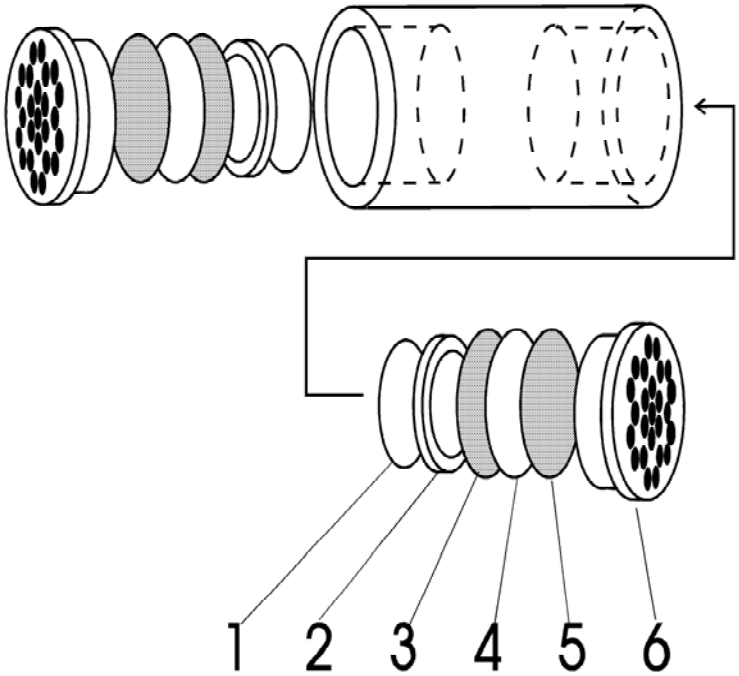

1 Solid Pad
2 Pad Retaining Ring
3 Stainless Screen
4 Coated Collection Filter
5 Stainless Screen
6 Diffuser End Cap

Transport and Storage

After assembly, the loaded sampler is placed into the re-sealable plastic bag, then the bagged sampler is placed into the brown airtight container, provided, and taken to the exposure site. After exposure, the above procedure is again followed to safely seal the used sampler into the brown airtight vial. It is then taken to the laboratory for analysis.

Exposed pads to be analyzed at an off-site laboratory can be safely shipped in the PS-118 8 ml vial. These vials can be rinsed, dried, and reused many times.

The sampler has the following lifetime associated with the various components

	Refrigerated Storage Method	**Frozen Storage Method**
Sealed in original glass vial within the aluminum pouch	90 days	1 year
Resealed in vial, after opening	90 days	
Loaded sampler in bag placed in brown vial with lid	60 days	
Exposed loaded sampler, in bag placed in brown vial with lid*	14-21 days	
*Analysis should be done as soon as possible after exposure.		
Extracted solution in water, in sealed 8 ml vial	90 days	

Table 1: Shelf life associated with Passive Sampler Components

Application of the Sampler in an Outdoor Microenvironment

It is mandatory to protect the loaded sampler from moisture while it is being exposed. To accomplish this task, and still retain proper airflow to the device, it is necessary to use P/N PS-115 Opaque Shelter w/sampler bracket for NO-NO_x, NO_2, and SO_2. O_3 requires P/N PS-106 w/sampler bracket and stainless steel mounting band clamp.

The PS-115 mounting bracket is attached to the site using several small screws or by passing a wire through two holes on each side of the bracket and then around the pole or post.

The sampler easily clips on to the bracket and the cup slides over the bracket to protect the sampler.

The PS-106 sampler bracket, once the sampler is clipped to it, easily slips over the shelter to hold the sampler in the correct position within the shelter.

Analytical Method for NO, NO2 and NOx

While preparing the reagents always use reagent grade chemicals, or highest grade available. For the analysis of NO, NO2, and NOx you will need the following reagents:

Sulfanilamide Solution

The sulfanilamide solution is prepared by dissolving 80 g of reagent grade sulfanilamide in a mixture of 200 ml concentrated phosphoric acid and 700 ml water. This solution is then diluted with water to make a total of 1000 ml.

NEDA Solution

The NEDA solution is prepared by dissolving 0.56 g N-(1-Naphthyl)-ethylenediamine dihydrochloride into 100 ml water. Store in a refrigerator.

Color Producing Reagent

Prepare color-producing reagent immediately before use. Mix the sulfanilamide solution and the NEDA solution in a 10:1 ratio. (10 parts Sulfanilamide solution to 1 part NEDA solution).

Nitrite Standard Stock Solution

Dry Sodium Nitrite, for over 4 hours, at a temperature of 105-110 ºC. Dissolve 1.5 g of this dried Sodium Nitrite in 1-liter water. A 1 ml sample of this solution contains 1000µg of Nitrite.

Nitrite Working Standard Solution

Dilute the Nitrite standard stock solution by 100 times with water. Then, 0, 2, 4,6,8, and 10 ml samples are each diluted with water to make 100 ml solutions. This produces working standard solutions of 0 - 1.0 µg nitrite/ml.

Analytical Operation

Samples

After exposure to the test environment, the stainless screens and cellulose fiber filter are put into a 25 ml glass vial, containing 8ml water, and then shake immediately. Use separate glass vials for NO2 and NOx elements. Vials should be sealed, per accepted laboratory practice.

Over the next 30 minutes, occasional shaking of the vials is recommended.

At the end of the first 30 minute period, vials are cooled to 2-6 ºC, and 2 ml of color producing reagent are added. Shake quickly, after adding the color-producing reagent, and continue to keep vials cool for an additional 30 minutes.

Vials are then allowed to equilibrate at room temperature, for about 20 minutes, and the amount of colored derivative is determined with a spectrophotometer at a wavelength of 545 nm.

Unexposed elements are put through the same procedure to obtain a blank value determination.

Standard Solutions

From the previously prepared nitrite working standard solutions, (those containing 0 - 1.0 µg nitrite/ml), mix 8 ml of each of the nitrite working standards with 2 ml of color reagent, shaking immediately, to prepare a standard curve. Chill standard solution, like samples, before adding color reagent.

Supplement

It is strongly recommended that separate pipettes be used for nitrite standard stock solution from those used for preparing nitrite working standard solutions.

When the exposed NOx element is placed in a vial with 8 ml of water, nitrite ion is produced. When 2 ml of the color-producing reagent is added, and the reaction is allowed to take place at 2-6 ºC, the amount of colored derivative produced is proportional to the amount of original nitrite. If the reaction takes place at warmer temperatures the amount of color derivative produced is not consistent.

It is recommended to use at least 3 blanks for each lot analyzed.

Procedures that help secure accurate analysis results include:

1. Screens and/or filter pads should be added to vials already containing a solution, never into a dry vial.

2. Vials must be shaken immediately after adding color reagent.

3. Cooling must be done according to the protocol.

Flow Injection Method

The flow injection method is a method using analyzing equipment available through various equipment manufacturers

This new method is very useful where the analysis of large numbers of samples is required. It is a very simple and accurate method, minimizing deviations caused by elapsed time, temperature, and other variables. The results, using this method, have high precision.

Calculation of Concentration for NOx, NO_2 and NO

In order to do the calculation you need to do the following steps:

1. Preparing the Standard Curve
2. Calculation of Concentration Data

Preparing the Standard Curve

In this procedure we will establish the Slope of the standard curve. You will need access to a spectrometer or a colorimeter and you will measure the absorbance of 6 standard samples.

1. Refer to Table 2 on the following page. The first two columns refer to values related to the concentration of the standard NO_2 solution. The next three columns refer to values related to the absorbance. The last column refers to the calculation of the Slope of the standard curve. Begin at the top left and proceed by filling in values in the different cells. Those cells which have been "*grayed out*" do not require a numerical value. When you finally enter a value at the bottom right cell you have completed the computation procedure.
2. Make sure that you have access to six standard samples. Make sure that the standard samples are of 0, 0.1, 0.2, 0.4, 0.6 and 0.8 μg/ml NO_2 solutions.
3. The first column requires the concentration of the standard sample (x). Enter the values if they do not exist on the table.
4. The second column requires the calculation of x^2. Enter the values if they do not exist on the table.
5. Compute Σx^2 (sum of all x^2) and enter the value in cell (8).
6. Using your colorimeter or spectrometer to measure the absorbance (y) of each sample. Enter the corresponding values in cell (2) through (7).
7. Cell (2) represents the blank absorbance y_0 (i.e. absorbance when the concentration is 0.0 μg/ml). Using this value calculate ($y - y_0$) and enter the net absorbance A for the various standard samples.
8. The next row represents the product between the concentration and the absorbance. Fill in the values of $x (y - y_o)$.
9. Compute $\Sigma x(y-y_0)$ and enter the sum in cell (9).
10. Compute the Slope by calculating $\frac{\Sigma x(y-y_0)}{\Sigma x^2}$ (cell (9) divided by (8) and enter the value in cell G.

Concentration of Standard NO_2 Solution (μg/ml)		Absorbance			Slope
x	x^2	y	$y - y_0$	$x(y - y_0)$	$\frac{\Sigma x(y-y_0)}{\Sigma x^2}$
(1)	(1) x (1)		A	(1) x A	(9) / (8)
0	0	(2)			
0.1	0.01	(3)	(3) – (2)		
0.2	0.04	(4)	(4) – (2)		
0.4	0.16	(5)	(5) – (2)		
0.6	0.36	(6)	(6) – (2)		
0.8	0.64	(7)	(7) – (2)		
	Σx^2			$\Sigma x(y-y_0)$	(9) / (8)
(8)	1.21			(9)	G

Table 2: Preparing the Standard Curve for NO, NO2 and NOx

CALCULATION OF CONCENTRATION DATA

After the Slope for the standard curve has been prepared, you will calculate the concentration. You will need access to a spectrometer or a colorimeter and you will measure the absorbance of the sample that you have collected. Here are the steps:

1. Refer to Table 3 on the following page. Each calculation has to be repeated several times depending upon the samples which you have.

2. Enter the location (descriptive term) for each site.

3. Enter the exposure time associated with each site. Enter values in row (3).

NOx Calculation

4. Using your spectrometer or colorimeter measure the absorbance for the sample associated with each site. Enter the values in row (4).

5. Measure the absorbance associated with a blank sample (0 μg/ml). Enter the values in row (1).

6. Calculate the absorbance for each sample. Enter the values in row (5) by taking the difference between rows (4) and (1).

7. Calculate the solution concentration in row 4. This is done by taking the absorbance in row (5) and dividing it by G – the Slope of the standard curve. Note, G was computed previously using Table 2 .

8. Calculate the collected weight in ng and enter the value in row (7). This value is obtained by taking a product of the solution concentration (6) and the abstract amount (usually 8 ml) and a factor of 1000 (for converting from PPM to PPB).

NO_2 Calculation

9. Using your spectrometer or colorimeter measure the absorbance for the sample associated with each site. Enter the values in row (9).

10. Measure the absorbance associated with a blank sample (0 μg/ml). Enter the values in row (2).

11. Calculate the absorbance for each sample. Enter the values in row (10) by taking the difference between rows (9) and (2).

12. Calculate the solution concentration in row (11). This is done by taking the absorbance in row (10) and dividing it by G – the Slope of the standard curve. Note, G was computed previously using Table 2.

13. Calculate the collected weight in ng and enter the value in row (12). This value is obtained by taking a product of the solution concentration (11) and the abstract amount (usually 8 ml) and a factor of 1000 (for converting from PPM to PPB).

14. Next calculate the concentration in row (13). This value is obtained by multiplying the concentration conversion coefficient α_{NO2} by the collected weight (12) and dividing by the exposure time (3). At 20ºC and 70% relative humidity $\alpha_{NO2} = 56$. For other values of temperature and relative humidity please refer to the following section for calculation of α_{NO2} .

NO Calculation

15. Calculate the collected weight in ng and enter the value in row (14). This value is obtained by taking a difference of the NOx weight (7) and the NO2 weight (12).

16. Next calculate the concentration in row (13). This value is obtained by multiplying the concentration conversion coefficient α_{NO} by the collected weight (12) and dividing by the exposure time (3). At 20ºC and 70% relative humidity $\alpha_{NO} = 60$. For other values of temperature and relative humidity please refer to the following section for calculation of α_{NO} .

NOx Calculation

17. Calculate the concentration of NOx in row (8) by adding the concentration of NO2 (13) and NO (15).

Compound	Blank Absorbance			Average	Slope of the Standard Curve	Temperature ºC	Relative Humidity (%)	Concentration Conversion Coefficient	
	B1	B2	B3					αNO_2	αNO
NOx				(1)=	G =	(20ºC)	(70%)	α_{NO2} = (56)	α_{NO} = (60)
NO_2				(2)=				α_{NO2} =	α_{NO} =

- α_{NO2} = 56 and α_{NO} = 60 when Temperature = 20ºC and Relative Humidity = 70%. For other combinations of temperature and relative humidity please refer to the discussion provided in following section.

	Specification			Samples			
	Sample Number			1	2	3	4
	Sample Location						
	Sampling Time (min)	(3)	=(3)				
NOx	Sample Absorbance	(4)	=(4)				
	Absorbance	(5)	= (4) – (1)				
	Solution Concentration (μg/ml)	(6)	= (5) / G				
	Collected Weight (ng)	(7)	= (6) x 8 x 1000				
	Concentration (PPB)	(8)	= (13) + (15)				
NO_2	Sample Absorbance	(9)	= (9)				
	Absorbance	(10)	= (9) – (2)				
	Solution Concentration (μg/ml)	(11)	= (10) / G				
	Collected Weight (ng)	(12)	= (11) x 8 x 1000				
	Concentration (PPB)	(13)	= α_{NO2} x (12) / (3)				
NO	Collected Weight (ng)	(14)	= (7) – (12)				
	Concentration (PPB)	(15)	= α_{NO} x (14) / (3)				

Table 3: Calculation of Concentration Data For NOx , NO2 and NO

Calculation of Concentration Conversion Coefficients for NO and NO_2

Typical values of α_{NO} and α_{NO2} are provided in Table 4.

For a combination of temperature and relative humidity which does not exist in Table 4 you can calculate α_{NO} and α_{NO2} using the following formulas:

$$[T] = \text{Ambient temperature in degree Centigrade}$$
$$[RH] = \text{Relative humidity in \%}$$

$$P_N = 17.535 \text{ (water vapor pressure in mm Hg at 20 degC)}$$

$$P_T = \text{Vapor pressure of water at the ambient temperature } [T]$$
(see Table 5 for typical values)

$$[P] = \left\{ \frac{2P_N}{P_T + P_N} \right\}^{2/3}$$
(see Table 5 for typical values)

$$\alpha_{NO} = \frac{10000}{(-0.78x[P]x[RH]) + 220}$$
$$\alpha_{NO_2} = \frac{10000}{(0.677x[P]x[RH]) + (2.009x[T]) + 89.8}$$

Example Calculation for α_{NO} and α_{NO2}

Let us calculate α_{NO} and α_{NO2} at 9 °C and 60% Relative Humidity.

Looking at Table 4 we have $\alpha_{NO} = 61$ and $\alpha_{NO2} = 64$.

Let us now use the formulas provided earlier:

$$[T] = 9$$
$$[RH] = 60$$
$$P_N = 17.535$$
$$P_T = 8.609 \text{ (see Table 5)}$$
$$[P] = \left\{ \frac{2P_N}{P_T + P_N} \right\}^{2/3}$$
$$= \left\{ \frac{2x17.535}{8.609+17.535} \right\}^{2/3}$$
$$= 1.216 \text{ (see Table 5)}$$
$$\alpha_{NO} = \frac{10000}{(-0.78x[P]x[RH]) + 220}$$
$$= \frac{10000}{(-0.78x1.216x60) + 220}$$
$$= 61.32$$
$$\alpha_{NO_2} = \frac{10000}{(0.677x[P]x[RH]) + (2.009x[T]) + 89.8}$$
$$= \frac{10000}{(0.677x1.216x60) + (2.009x9) + 89.8}$$
$$= 63.58$$

Temperature (ºC)	Relative Humidity(%)	α_{NO2}	α_{NO}
-10	50	84	61
-9	50	83	61
-8	50	81	61
-7	50	80	61
-6	50	79	61
-5	50	78	61
-4	50	77	61
-3	50	76	60
-2	50	75	60
-1	50	74	60
0	50	74	60
1	60	68	64
2	60	68	63
3	60	67	63
4	60	66	63
5	60	66	63
6	60	65	62
7	60	65	62
8	60	64	62
9	60	64	61
10	60	63	61
11	60	63	61
12	60	62	60
13	60	62	60
14	60	61	60
15	70	58	63
16	70	58	62
17	70	57	62
18	70	57	61
19	70	57	61
20	70	56	60

Table 4: α_{NO} and α_{NO2} as a function of temperature and relative humidity

… Table continued on next page

Temperature (ºC)	Relative Humidity(%)	α_{NO2}	α_{NO}
21	70	56	60
22	70	56	60
23	70	55	59
24	70	55	59
25	80	53	61
26	80	52	61
27	80	52	60
28	80	52	60
29	80	52	59
30	80	52	59
31	80	52	58
32	80	51	58
33	80	51	57
34	80	51	57
35	80	50	57
36	80	50	56
37	80	50	56
38	80	50	56
39	80	49	55
40	80	49	55

Table 4: α_{NO} and α_{NO2} as a function of temperature and relative humidity

Temperature [T] degC	Water Vapor Pressure [P_T] mmHg	Vapor Pressure Coefficient [P] dimensionless
-10	2.149	1.4697
-9	2.326	1.4609
-8	2.514	1.4518
-7	2.715	1.4421
-6	2.931	1.4320
-5	3.163	1.4213
-4	3.410	1.4101
-3	3.673	1.3984
-2	3.956	1.3861
-1	4.258	1.3732
0	4.579	1.3599
1	4.926	1.3459
2	5.294	1.3314
3	5.685	1.3164
4	6.101	1.3009
5	6.543	1.2849
6	7.013	1.2685
7	7.513	1.2515
8	8.045	1.2341
9	8.609	1.2163
10	9.209	1.1980
11	9.844	1.1794
12	10.518	1.1605
13	11.231	1.1412
14	11.987	1.1217
15	12.788	1.1018

Table 5: Water Vapor Coefficients as a function of Temperature

…Table continued on next page

Temperature	Water Vapor Pressure	Vapor Pressure Coefficient
[T]	[P_T]	[P]
degC	mmHg	dimensionless
16	13.634	1.0818
17	14.530	1.0615
18	15.477	1.0411
19	16.477	1.0206
20	17.535	1.0000
21	18.650	0.9794
22	19.827	0.9587
23	21.068	0.9380
24	22.377	0.9174
25	23.756	0.8969
26	25.209	0.8764
27	26.739	0.8561
28	28.349	0.8360
29	30.043	0.8160
30	31.824	0.7962
31	33.695	0.7767
32	35.663	0.7575
33	37.729	0.7385
34	39.898	0.7198
35	42.175	0.7013
36	44.563	0.6832
37	47.067	0.6655
38	49.692	0.6480
39	52.442	0.6309
40	55.324	0.6142

Table 5: Water Vapor Coefficients as a function of Temperature

Analytical Method for SO_2

Sample (One exposed filter pad only)

After exposure to the test environment, the stainless screens and cellulose fiber filter are put into a 25 ml glass vial, containing 8ml water, and then shake immediately. Vials should be stoppered, per accepted laboratory practice.

Over the next 30 minutes, occasional shaking of the vials is recommended.

Add 0.2 ml of Hydrogen Peroxide solution (1.75% solution), and shake slowly for 10 minutes.

Vials are then allowed to equilibrate at room temperature, for about 20 minutes, then sent for IC analysis

Unexposed elements are put through the same procedure to obtain a blank value determination.

Analysis by Ion Chromatograph

Analyzer	Dionex Ion Chromatograph 4000i
Columns	AS4A Separation Columns
Flow Rate	1.7 ml/min
Detector Range	30 µs, 10 µs, 1 µs
Eluant	1.8 mM Na_2CO_3 + 1.7 mM $NaHCO_3$
Regenerant	0.25 N H_2SO_4
Sample Loop	100 µl

Calculation of Concentration for SO2

$$SO_2 \text{ concentration (ppb)} = \alpha_{SO_2} \times \frac{WSO_2}{t}$$

where :

WSO_2 is the sulfate quantity (in ng) collected on the SO_2 elements, determined using the standard curve.

α_{SO2} is the ppb concentration conversion coefficients (ppb - min/ng). At 20 °C the value of $\alpha_{SO2} = 39$.

t is sample collection time in minutes

If you have sample conditions other than 20 °C please refer to Table 6 which provides α_{SO2} at various commonly encountered values.

Temperature	Diffusion Coefficient	Ratio of Diffusion Coefficients	Conversion Coefficient
T	D_T	D_{20}/D_T	α_{SO2}
ºC	cm^2/sec	dimensionless	PPB-min/ng
-10	0.1068	1.22	47.5
-9	0.1076	1.21	47.2
-8	0.1083	1.20	46.9
-7	0.1091	1.19	46.5
-6	0.1098	1.19	46.2
-5	0.1106	1.18	45.9
-4	0.1113	1.17	45.6
-3	0.1121	1.16	45.3
-2	0.1129	1.15	45.0
-1	0.1136	1.15	44.7
0	0.1144	1.14	44.4
1	0.1151	1.13	44.1
2	0.1159	1.12	43.8
3	0.1167	1.12	43.5
4	0.1175	1.11	43.2
5	0.1182	1.10	43.0
6	0.1190	1.09	42.7
7	0.1198	1.09	42.4
8	0.1206	1.08	42.1
9	0.1214	1.07	41.8
10	0.1222	1.07	41.5
11	0.1230	1.06	41.3
12	0.1237	1.05	41.0
13	0.1245	1.05	40.8
14	0.1253	1.04	40.5

Table 6: Conversion Coefficient αSO2 for SO2 as a function of Temperature

…Table continued on next page

Temperature	Diffusion Coefficient	Ratio of Diffusion Coefficients	Conversion Coefficient
T	D_T	D_{20}/D_T	α_{SO2}
ºC	cm^2/sec	dimensionless	PPB-min/ng
15	0.1261	1.03	40.3
16	0.1269	1.03	40.0
17	0.1277	1.02	39.8
18	0.1286	1.01	39.5
19	0.1294	1.01	39.2
20	0.1302	1.00	39.0
21	0.1310	0.99	38.8
22	0.1318	0.99	38.5
23	0.1326	0.98	38.3
24	0.1334	0.98	38.1
25	0.1343	0.97	37.8
26	0.1351	0.96	37.6
27	0.1359	0.96	37.4
28	0.1367	0.95	37.1
29	0.1376	0.95	36.9
30	0.1384	0.94	36.7
31	0.1392	0.94	36.5
32	0.1401	0.93	36.2
33	0.1409	0.92	36.0
34	0.1418	0.92	35.8
35	0.1426	0.91	35.6
36	0.1435	0.91	35.4
37	0.1443	0.90	35.2
38	0.1452	0.90	35.0
39	0.1460	0.89	34.8
40	0.1469	0.89	34.6

Table 6: Conversion Coefficient αSO2 for SO2 as a function of Temperature

Comparison of Integrated Sampling and Real-Time Monitors

NO

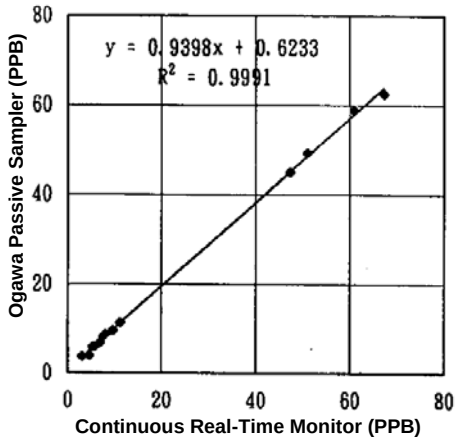

NO2

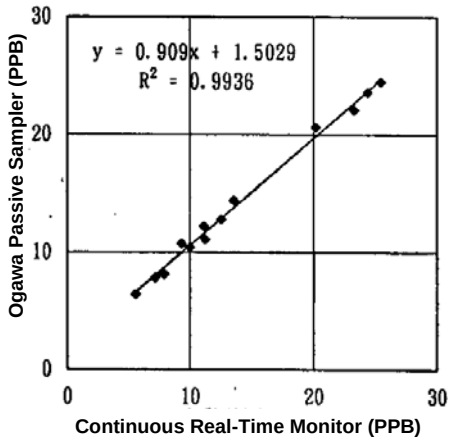

SO2

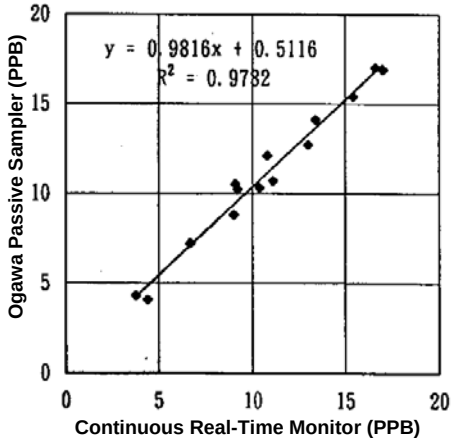

Reference:

Yokohama City Research Institute of Environmental Science, Yokohama, Japan, Report No. 128, March 1997

Blank Test Values

Below is the obtained absorbance for 3 unexposed filters coated for NO_2 and NO_x.

NO2 Absorbance	NOx Absorbance
0.009	0.155
0.009	0.142
0.008	0.149
0.009	0.149
Average 0.009	Average 0.149

The higher blank test for NOx compared to that of NO2 is due to PTIO also reacting when color producing is being done. This makes the produced material absorbing wavelength stay near the determining wave length. But, as the NOx collection element holds a fixed quantity of 1.5mg PTIO, the blank value will be stable if the analytical operation is done in a short time. Blank values can also be made lower by taking away PTIO blue color, by extracting with ethyl ether.

Example Calculations

Exposure was made in the ambient air at roadside for 1432 minutes, from 10:32 hrs. August 4th to 10:24 hrs. August 5th. The samplers determined NOx at 0.343 and NO2 at 0.094. The collected NOx quantity is determined as follows:

$$WNOx = \frac{SABNOx - BABNOx}{S} \times V$$

Where: WNOx is in ug of nitrite.
SABNOx is absorbance of NOx sample.
BABNOx is absorbance of NOx blank.
S= Slope (for this calculation assume it is 0.8415)
V= volume of extract in ml.

$$= \frac{0.343-0.149}{.8415} (8) = 1.844 \text{ ug nitrite} = 1844 \text{ ng nitrite.}$$

Collected NO2 Quantity Is Converted to NO2 Quantity as follows:

$$WNO2 = \frac{SABNO2 - BABNO2}{S} \times V$$

Where: WNO2 is in ug of nitrite.
SABNO2 is absorbance of NO2 sample.
BABNO2 is absorbance of NO2 blank.
S= Slope (for this calculation assume it is 0.8415)
V= Volume of extract in ml.

$$= \frac{0.094-.009}{.8415} (8) = 0.808 \text{ ug nitrite} = 808 \text{ ng nitrite}$$

From the WNOx and WNO2 values, using equation (5) we can calculate the PPB of NO in the air sample:

$$NO\ (PPB) = \alpha_{NO} (WNOx - WNO2) / t$$
$$= 60 (1844-808) / 1432$$
$$= 43 \text{ PPB}$$

Using equation (6) we can calculate the PPB of NO2:

$$NO2(PPB) = \alpha_{NO2} (WNO2) / t$$
$$= 56 (808) / 1432$$
$$= 32 \text{ PPB}$$

Since the NOx concentration is the sum of the NOx and NO2:

$$NOx\ (PPB) = 43 + 32 = 75 \text{ PPB}$$