NH3
Sampling Protocol
Using The Ogawa Sampler*

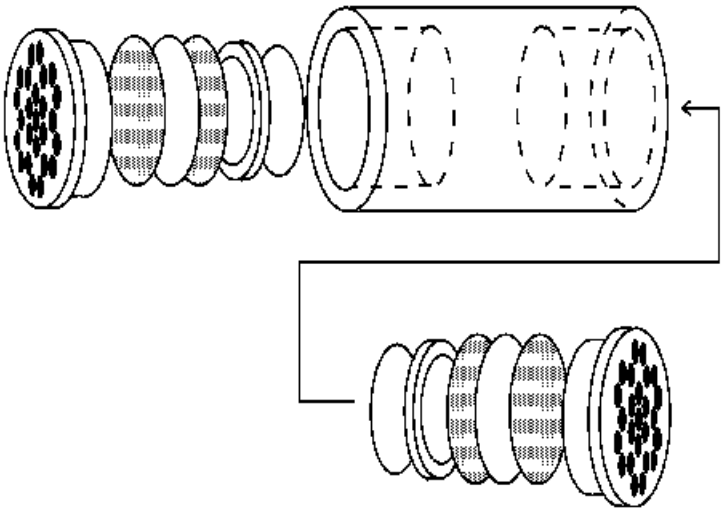

V3.98

Yokohama City Research Institute for Environmental Science
1-2-15, Takigashira, Isogo-ku, Yokohama, 235-0012 Japan
TEL(045)752-2605 FAX(045)752-2609
E-mail kanken@city.yokohama.jp

Notice

Certain products mentioned in this User's Guide may be trademarks. These products have been mentioned for identification purposes only.

Version Number

Edition	Month / Year
1.0	September / 2005

General Information

1. "*Water*", in all cases, shall mean water meeting ASTM Type I specifications. (Equal to Milli-Q by Millipore). Use Reagent grade chemicals for all applications.

2. "*Wash*", in all cases, shall mean cleaning thoroughly with water meeting ASTM Type I specifications.

3. All sampler components should be carefully washed and dried before each use. This is an important function, and special care should be taken to do this step carefully.

4. Washing, drying, assembly of sampler, and loading with the proper pre-coated filters should be done in a clean area, free of NH3 contamination. It is not necessary to use a glovebox.

5. When the point of research is outdoors, the sampler should be given protection from the sun and rainfall. Ogawa & Co., USA, Inc. has an opaque shelter and mounting bracket designed for that purpose.

6. Direct exposure of individuals can be easily measured by using the alligator clip to attach the sampler to clothing as close to the face as possible.

Ogawa Sampler Assembly

The sampler is comprised of 2 chambers. In each chamber of the sampler, the assembly stack-up is described below. Start at the innermost position with the pad and progress outwards to the diffuser end cap.

1 Solid Pad
2 Pad Retaining Ring
3 Stainless Screen
4 Coated Collection Fi
5 Stainless Screen
6 Diffuser End Cap

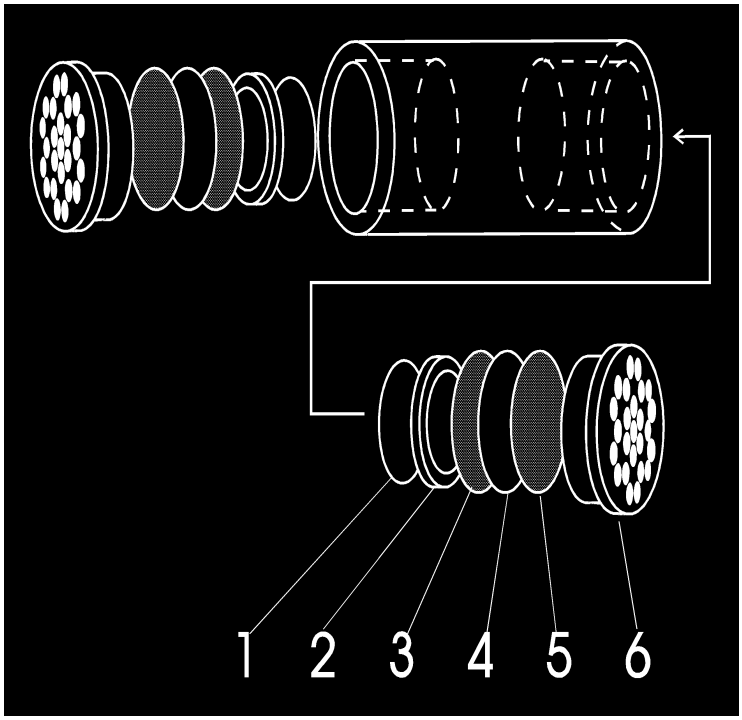

Transport and Storage

After assembly, the loaded sampler is placed into the re-sealable plastic bag. The bagged sampler is placed into the brown airtight container, provided, and taken to the exposure site. After exposure, the above procedure is again followed to safely seal the used sampler into the brown airtight vial. It is then taken to the laboratory for analysis.

The sampler has the following lifetime associated with the various components

	Refrigerated Storage Method	**Frozen Storage Method**
Sealed in glass vial and aluminum pouch	90 days	1 year
Resealed in vial, after opening	90 days	
Loaded sampler in bag placed in brown vial with lid	90 days	
Exposed loaded sampler, in bag placed in brown vial with lid	14 days	
Extracted solution in water, in sealed vial	90 days	

Table 1: Shelf life associated with Passive Sampler Components

Application of the Sampler in an Outdoor Micro-Environment

It is mandatory to protect the loaded sampler from moisture while it is being exposed. To accomplish this task, and still retain proper airflow to the device, it is necessary to use P/N PS-115 Opaque Shelter w/sampler bracket, which is shown on our price list as being for NO-NO_x, NO_2, and SO_2.

The PS-115 mounting bracket is attached to the site using several small screws or by passing a wire through two holes on each side of the bracket and then around the pole or post.

The sampler easily clips on to the bracket and the cup slides over the bracket to protect the sampler.

The PS-106 sampler bracket, once the sampler is clipped to it, easily slips over the shelter to hold the sampler in the correct position within the shelter.

NH_3 Analytical Procedure using Ogawa Sampler

1. Preparing of the NH_4 Standard Solution

Primary Standard Solution (1000 µg NH_4 /ml)

Take Out 10 ml

By using a pipette

100 ml Flask

Dilute 10 ml primary standard solution with pure water to make 100 ml secondary solution.

Secondary Standard Solution (10 µg NH /ml)

Take Out

By using a pipette

100 ml Flask

Dilute 1 ml secondary standard solution with pure water to make 100 ml working standard solution. (0.1 µg NH /ml)
Dilute 10 ml secondary standard solution with pure water to make 100 ml working standard solution. (1.0 µg NH_4 /ml)

Working Standard Solution of 0.1 10 µg NH /ml

4. Analytical Procedure of NH_3

Exposed Pads and Blank r Pads

25 ml Test Tube

Put the exposed pad into test tube.

Add 8 ml water into test tube.

Extraction

After extracted 30 minutes, shake slowly.

Analyzed by IC

5. Calculation for NH_3 Concentration

Value for Exposed Pads

Value for Black Pads

Value for Standard Solution

Fundamental Data for Exposed Time, Temperature, Relative Humidity

Calculate for Standard Curve

Calculation for the Collected Amounts of NH_3

$$[\text{Collected Amounts of } NH_3] = \frac{([\text{Exposed Pads}]-[\text{Blank Pads}])*[\text{Extract Quantity 8 ml}]}{[\text{Gradient of Standard Curve for } NH_3]}$$

Calculation of Concentration for NH_3

NH concentration = α*[NH_3 Collected Amounts]/[Exposed Time]

NH_3 Concentration : ppb
NH_3 Collected Amounts : ng
Exposed Time : min

Sampling Rate = 32.3 ml/min α = 43.8 ppb min/ng

Determination Results