TRIME®-EZ/-IT
Intelligent rod probes

- State-of-the-art electronic sensors with integrated TDR electronics
- Measure direct %vol soil water content with today´s most advanced TDR automatic curve-analyzing electronics
- 0...100% vol soil water-content measurement
- Reliable multi-point digital/serial networking
- Bulk soil electrical conductivity up to 10dS/m

TRIME® probes with internal TDR-electronics

IMKO's intelligent rod probes are highly sophisticated high-tech devices and extremely robust. A unique feature is their integrated TDR measuring electronics in the probe's body, thus achieving the greatest accuracy and best networking capability e.g. sensor cable lengths of up to 3 km are possible for the IMP-Bus version.
A variety of rod probe designs are available for different measuring volumes and for applications in highly saline materials.

TRIME®-IT
TRIME®-ITC

For in situ monitoring of volumetric moisture in soils and other porous materials. The small measuring volume permits high spatial resolution. Burying capability for both horizontal and vertical orientation.

- **TRIME-IT** is the standard sensor for the greatest accuracy in materials with bulk electrical conductivity of up to **2dS/m**.
- **TRIME-ITC** is specially designed for measuring in highly saline media up to **10dS/m**.

bury *horizontally* or *vertically*

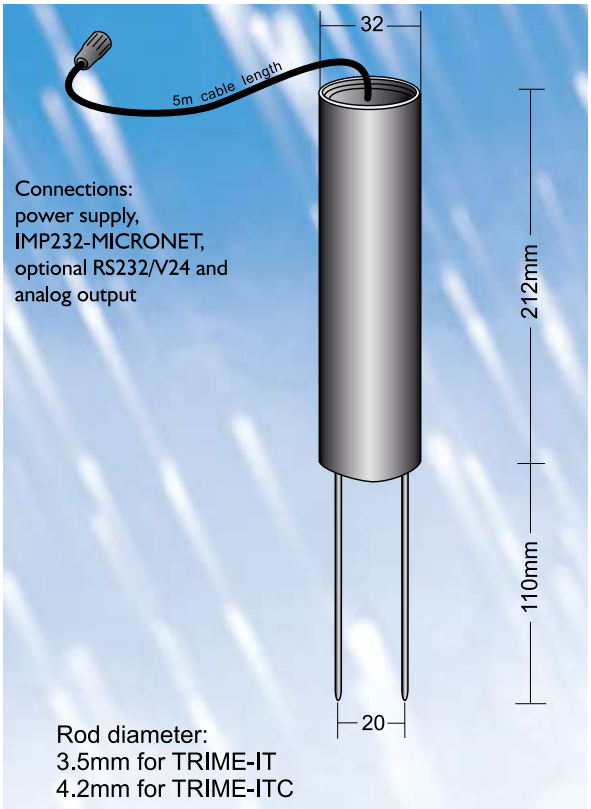

Technical Data		
Power supply:	7V..15V-DC	
Supply current:	8mA standby, 250mA during 10..15sec. of measuring time	
Measuring range:	0..100% volumetric water content	
Accuracy:	**TRIME-IT**	**TRIME-ITC**
Range 0..40%:	+-1%	+-2%
Range 40..70%:	+-2%	+-3%
Repeating accuracy:	+-0.5%	+-0.5%
Bulk electrical conductivity:	0..2dS/m	0..10dS/m
Pore water electrical conductivity:	0..12dS/m	0..50dS/m
Size/weight:	140mm x ø32mm	140mm x ø32mm
Rod lenght:	standard: 110mm, optional 80 or 50mm	
Rod diameter:	3,5mm	4,2mm
Temperature range:	-15°C...50°C (other temperature ranges on request!)	
Temperature caused drift:	max. +-0.5%	
Interfaces:	IMP232 MICRONET (operating mode A) or RS232/V24 and 0..1V or 0(4)..20mA analoque output (operating mode B or C)	
Calibration data:	freely configurable	
Cable length:	5m (special length on request!)	
Probe body:	waterproof sealed PVC (IP68)	

TRIME®-EZ
TRIME®-EZC

For in situ monitoring of volumetric moisture in soils and other porous materials. The large measuring volume is particularly suitable for applications in heterogeneous and skeletal media. Burying capability for both horizontal and vertical orientation.

- **TRIME-EZ** is the standard sensor for maximum accuracy in materials with bulk electrical conductivity of up to **2dS/m.**
- **TRIME-EZC** is specially designed for measuring in highly saline media up to **8dS/m**.

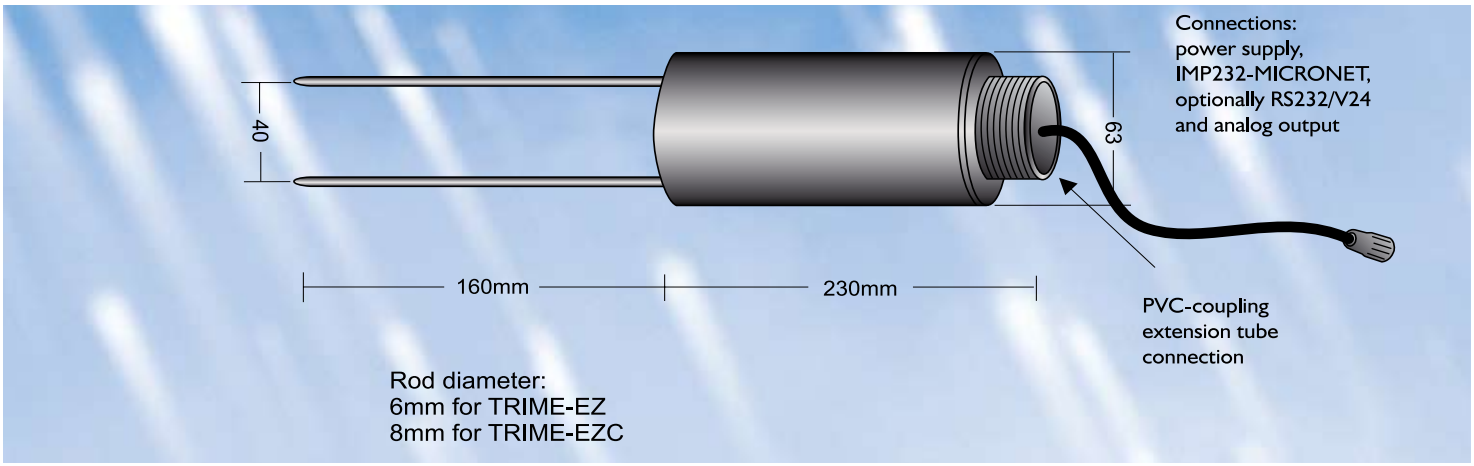

Technical Data

Power supply:	7V..15V-DC	
Supply current:	8mA standby, 250mA during 10..15sec. of measuring time	
Measuring range:	0..100% volumetric water content	
Accuracy:	**TRIME-EZ**	**TRIME-EZC**
Range 0..40%:	+-1%	+-2%
Range 40..70%:	+-2%	+-3%
Repeating accuracy:	+-0.3%	+-0.5%
Bulk electrical conductivity:	0..2dS/m	0..8dS/m
Pore water electrical conductivity:	0..10dS/m	0..45dS/m
Size/weight:	230mm x ø63mm	
Rod lenght:	standard: 100 or 160mm, optional 200mm	
Rod diameter:	6mm	8mm
Temperature range:	-15°C...50°C (other temperature ranges on request!)	
Temperature caused drift:	max. +-0.4%	
Interfaces:	IMP232 MICRONET (operating mode A) or RS232/V24 and 0..1V or 0(4)..20mA analoque output (operating mode B or C)	
Calibration data:	freely configurable	
Cable length:	5m (special length on request!)	
Probe body:	waterproof sealed PVC (IP68)	

Data management with a Palm-PC and Windows-CE

For users wanting to exploit modern PC technology to the full, we can supply the optimum means for measurement-data management on location, right at the point of measurement, using a Palm-PC with Windows-CE. TRIME-EZ/IT with the RS232/V24 interface provide the means for the direct extracting of recorded moisture readings with the Palm-PC and storing them in a file incorporating site-specific data.

IMKO GmbH ■ Im Stöck 2 ■ Germany-76275 Ettlingen ■ Phone +49-(0)72 43-59 210 ■ Fax +49-(0)72 43-9 08 56 ■ e-mail INFO@IMKO.de ■ www.IMKO.de